ARTIFICIAL NEURAL NETWORK BASED SELF-TUNNING ADAPTIVE POWER SYSTEM STABILIZER

Huma[1], K.M.Rafi[2], Pavan Kumar[3]

[1] *M.Tech, (Power System), Department of Electrical Engineering, AFSET, Faridabad, Haryana, India*
[2] *Department of Electrical Engineering, AFSET, Faridabad, Haryana, India*
[3] *Department of Electrical Engineering, NIET, Greater Noida, U. P. India*

ABSTRACT

This paper presents an approach to the design of self-tuning adaptive power system stabilizer which is based on artificial neural network. Result shows that ANN based power system stabilizer can provide good damping for both local and inter area modes of oscillations. An ANN is used for self-tuning the different parameters of PSS like stabilizing gain K_{stab} and time constant (T1) for Lead PSS in real- time.

The nodes in the input layer of the ANN receive generator terminal active power (P) and reactive power (Q). Investigations are carried out to assess the dynamic performance of the system with self-tuning PSS based on ANN (ST-ANNPSS) over a wide range of loading conditions. The neural networks possess the capability to generalize, thus, they can predict new outcomes from past trends. The Matlab/Simulink's neural network toolbox is used to perform the simulations. The simulation and experimental results shows the effective dynamic performance of the proposed system.

Keywords*: *Lead PSS, Power System Stabilizer, Artificial Neural Network, Stabilizing Gain and Time Constant.

I INTRODUCTION

Power system stability plays an important role in power system. Stability means it is the property of power system that enables it to remain in a state of operating equilibrium under normal operating condition and to regain an acceptable state of equilibrium after being subjected to a disturbance.

Small signal stability is the ability of the power system to maintain synchronism under small disturbances. Such disturbances occur continually on the system because of small variations in load and generation. The disturbances are considered sufficiently small for linearization of system equations to be permissible for purpose of analysis. Instability that may result can be of two forms : (i) steady increases in rotor angle due to lack of sufficient synchronizing torque, or (ii) rotor oscillation of increasing amplitude due to lack of sufficient damping torque. Small oscillations in power system were described as hunting of synchronous machines. Small oscillations were a matter of concern but few decades before only transient stability were taken into account. In early sixties, most of the generators were getting interconnected and the automatic voltage regulators (AVRs) were more efficient. With bulk power transfer on long and weak transmission lines and application of high gain, fast acting AVRs, small oscillations of even lower frequencies were observed.

Reduction in power transfer levels and AVR gains does curb the oscillations and is often resorted to during system emergencies. These are however not feasible solutions to the problem. The stability of the system, in principle, can be enhanced substantially by application of some form of close-loop feedback control.

So when this problem noticed, was solved by fitting the generators with a feedback controller which sensed the rotor slip or change in terminal power of the generator and fed it back at the AVR reference input with proper phase lead and magnitude so as to generate an additional damping torque on the rotor [1]. This device is Power System Stabilizer (PSS).

There are limited success by using some other controls through turbine, governor loop for damping power oscillations .Some other technique involved like fast valving technique has renewed interest in this type of control [2].

II POWER SYSTEM STABILITY

Stability of a power system refers to the continuance of intact operation following a disturbance. It depends on the operating condition and the nature of the physical disturbance. An equilibrium set of a power system is stable if, when the initial state is in the given starting set, the system motion converges to the equilibrium set, and operating constraints are satisfied for all relevant variables along the entire trajectory [3].

Generators must be kept in synchronism; if their relative motion begins to change too much, uncontrollable oscillations may appear in the grid causing damage to generators and to equipment [4].

Therefore, relays are used to detect this condition and trip generators before the damage occurs. Although tripping prevents the damage, it results in under-frequency, and possibly load interruption, and in the worst case, cascading outages and blackout.

Traditionally, the stability problem has been one of maintaining synchronous operation. Since power systems rely on synchronous machines for generation of electrical power, a necessary condition for satisfactory system operation is that all synchronous machines remain in synchronism or, colloquially, ‘in step.’’ This aspect of stability is influenced by the dynamics of generator rotor angles and power angle relationships.

III ARTIFICIAL NEURAL NETWORK

An artificial neural network, often just named a neural network, is a mathematical model inspired by biological neural networks. A neural network consists of an interconnected group of artificial neurons, and it processes information using a connectionist approach to computation. In most cases a neural network is an adaptive system changing its structure during a learning phase. Neural networks are used for modelling complex relationships between inputs and outputs or to find patterns in data [5] - [6].

The most significant property of a neural network is that it can learn from environment ,and can improve its performance through learning .Learning is a process by which the free parameters of a neural network i.e. synaptic weights and thresholds are adapted through a continuous process of stimulation by the environment in which the network is embedded [7].

An artificial network consists of a pool of simple processing units which communicate by sending signals to each other over a large number of weighted connections [8] - [9].

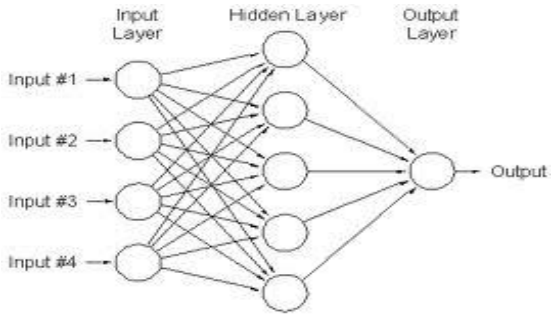

Fig1. A simple neural network

Back propagation is the generalization of the Widrow-Hoff learning rule to multiple-layer networks and nonlinear differentiable transfer functions. Input vectors and the corresponding target vectors are used to train a network until it can approximate a function, associate input vectors with specific output vectors, or classify input vectors in an appropriate way. Networks with biases, a sigmoid layer, and a linear output layer are capable of approximating any function with a finite number of discontinuities. Properly trained Back propagation networks tend to give reasonable answers when presented with inputs that they have never seen. Typically, a new input leads to an output similar to the correct output for input vectors used in training that are similar to the new input being presented. This generalization property makes it possible to train a network on a representative set of input/target pairs and get good results without training the network on all possible input/output pairs [8]-[11].

There are generally four steps in the training process:

1. Assemble the training data.
2. Create the network object.
3. Train the network.
4. Simulate the network response to new inputs.

3.1 Feed Forward Network:

Where the data flow from input to output units is strictly feed-forward. The data processing can extend over multiple (layers of) units, but no feedback connections are present, that is, connections extending from outputs of units to inputs of units in the same layer or previous layers. A single-layer network of S logsig neurons having R inputs is shown below.

Feed forward networks often have one or more hidden layers of sigmoid neurons followed by an output layer of linear neurons. Multiple layers of neurons with nonlinear transfer functions allow the network to learn nonlinear and linear relationships between input and output vectors. The linear output layer lets the network produce values outside the range -1 to +1. On the other hand, to constrain the outputs of a network (such as between 0 and 1), then the output layer should use a sigmoid transfer function (such as logsig).

As noted in Neuron Model and Network Architectures, for multiple-layer networks the number of layers determines the superscript on the weight matrices. The appropriate notation is used in the two-layer tansig/purelin network shown next.

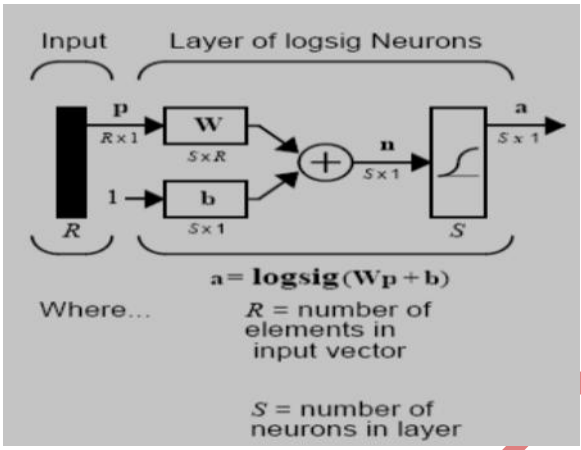

Fig 2 Single layer network

This network can be used as a general function approximator. It can approximate any function with a finite number of discontinuities arbitrarily well, given sufficient neurons in the hidden layer [12].

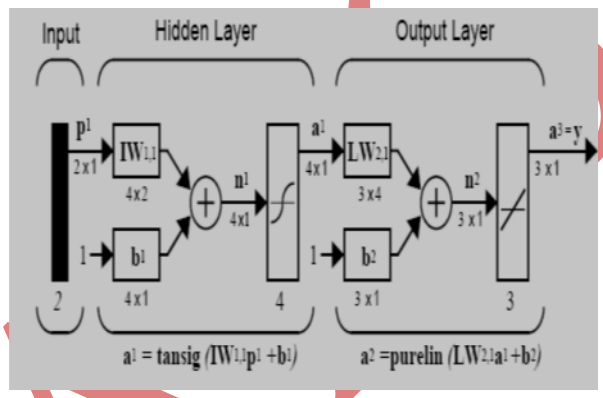

Fig. 3 Two layer network

3.2 Recurrent Networks:

That do contain feedback connections. Contrary to feed forward networks, the dynamical properties of the network are important. In some cases, the activation values of the units undergo a relaxation process such that the network will evolve to a stable state in which these activations do not change anymore. In other applications, the changes of the activation values of the output neurons are sufficient such that the dynamical behaviour constitutes the output of the network.

IV POWER SYSTEM STABILIZER

The dynamic stability of a system can be improved by providing suitably tuned power system stabilizers on selected generators to provide damping to critical oscillatory modes. Suitably tuned Power System Stabilizers (PSS), will introduce a component of electrical torque in phase with

generator rotor speed deviations resulting in damping of low frequency power oscillations in which the generators are participating. The input to stabilizer signal may be one of the locally available signal such as changes in rotor speed, rotor frequency, accelerating power or any other suitable signal. This stabilizing signal is compensated for phase and gain to result in adequate component of electrical torque that results in damping of

rotor oscillations and thereby enhance power transmission and generation capabilities. State-space techniques described under Dynamic Stability Studies or classical control theory such as Bode plots, root locus techniques can be used to determine suitable parameters for power system stabilizers. The design can then be verified with a transient stability analysis for practical system disturbances

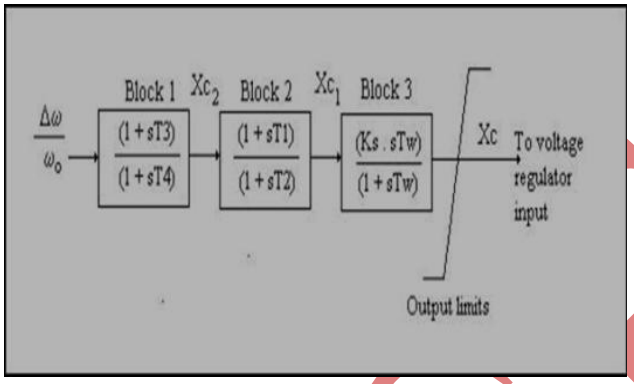

Fig. 4 A Typical Control Schematic Diagram Of Power System Stabilizer

The PSS are designed mainly to stabilize local and inter area modes. However, care must be taken to avoid unfavourable interaction with intra- plant modes or introduce new modes which can become unstable.

If the local mode of oscillation is major concern (particularly for the case of a generating station transmitting power over long distances to a load centre) the analysis of the problem can be simplified by considering the model of a single machine (the generating station is represented by an equivalent machine) connected to an infinite bus (SMIB). With a simplified machine model and the excitation system, the analysis can be carried out using the block diagram representation. The instability arises due to the negative damping torque caused by fast acting exciter under operating conditions that lead to K_5 < 0. The objective of PSS is to introduce additional damping torque without affecting the synchronizing torque.

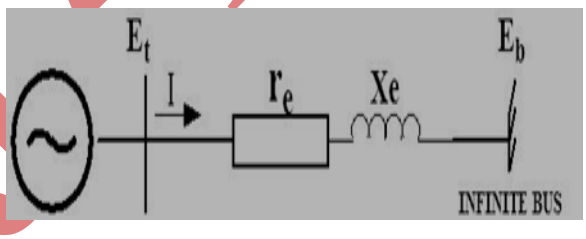

Fig.5 Single Machine Infinite Bus System.

A single machine-infinite bus (SMIB) system is considered for the present investigations. A machine connected to a large system through a transmission line may be reduced to a SMIB system, by using Thevenin's equivalent of the transmission network external to the machine.

Because of the relative size of the system to which the machine is supplying power, the dynamics associated with machine will cause virtually no change in the voltage and frequency of the Thevenin's voltage (infinite bus voltage). The Thevenin equivalent impedance shall henceforth be referred to as equivalent impedance Conventional PSS comprising cascade connected lead networks with generator angular speed deviation as input

signal has been considered shows the small perturbation transfer function block diagram of the SMIB system relating the pertinent variables of electrical torque, speed, angle, terminal voltage, field voltage and flux linkages.

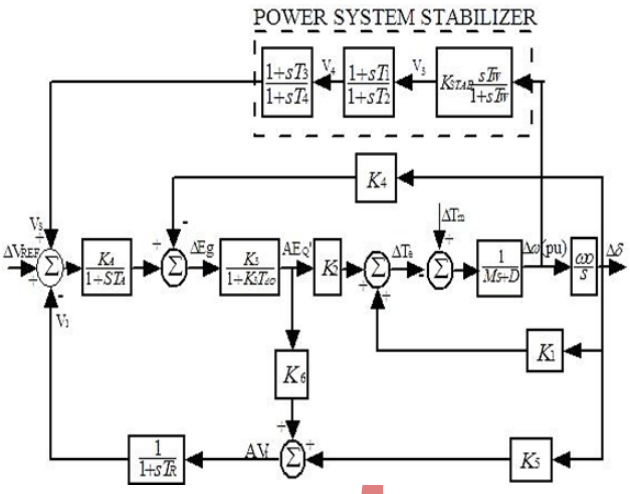

Fig.6 Block diagram of a single machine -infinite bus system with conventional PSS [11].

This linear model has been developed, by linearizing the nonlinear differential equations around a nominal operating point.

Transfer function model of the power system stabilizer and the design considerations:

The transfer function of a PSS is represented as:

$$T.F = K_{STAB}\frac{sT_w}{(1+sT_w)}\left(\frac{1+sT_1}{1+sT_2}\right)$$

Where KSTAB is stabilizer gain, Twis washout time constant and T1; T2; are time constants of the lead-lag networks. An optimum stabilizer is obtained by a suitable selection of time constants Tw; T1; T2 and stabilizer gain KSTAB.

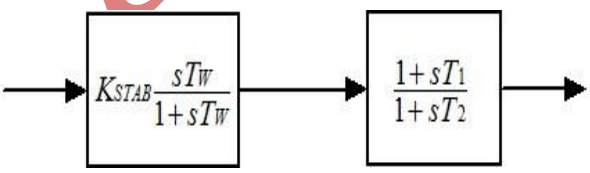

Fig. 7 Conventional PSS

To damp rotor oscillations, the PSS must produce a component of electrical torque in phase with the rotor speed deviation. This requires phase-lead circuits to compensate the phase-lag between exciter input (i.e. PSS output) and the resulting electrical torque. The phase characteristic of the system depends on the system parameters and the operating condition. The required phase-lead for a given operating condition and system parameters can be achieved by selecting the appropriate value of time constants. The signal washout is a high-pass filter that prevents steady changes in the speed from modifying the field voltage. The value of the washout time constant Tw should be high enough to allow signals associated with oscillations in rotor speed to pass unchanged. From

the viewpoint of the washout function, the value of Tw is not critical and may be in the range of 1-20 sec. For local mode oscillations in the range of 0.8-2.0 Hz, a washout time constant of about 1.5sec is satisfactory. From the viewpoint of low-frequency inter area oscillations, a washout time constant of 10sec or higher is desirable. Ideally, the stabilizer gain should be set at a value corresponding to optimum damping. However, this is often limited by other considerations. It is set to a value, which results in satisfactory damping of the critical modes without compromising the stability of the other modes, and which does not cause excessive amplification of stabilizer input signal noise [11].

V.SIMULATION RESULTS AND DISCUSSION

The performance of ST-ANNPSS is shown in Fig. (12) has been modelled by MATLAB/SIMULINK to study the deviation of rotor speed and rotor angle.

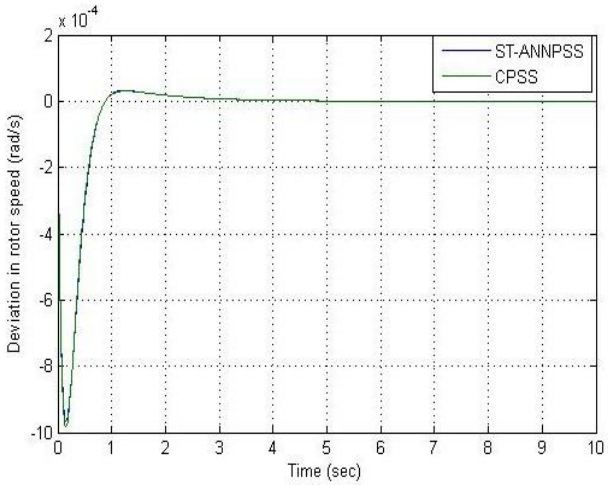

Fig. 8 Deviation of rotor speed for P=1(pu) and Q=0 (pu)

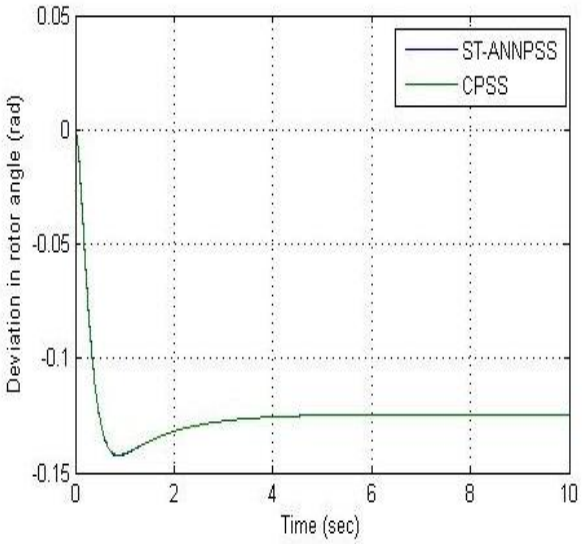

Fig.9 Deviation of rotor angle for P=1(pu) and Q=0 (pu)

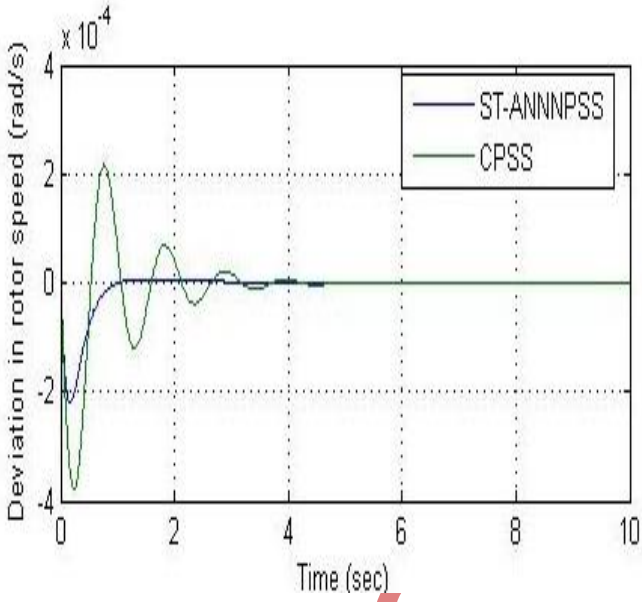

Fig. 10 Deviation of rotor speed for P=0.2 and Q=0.6 (pu)

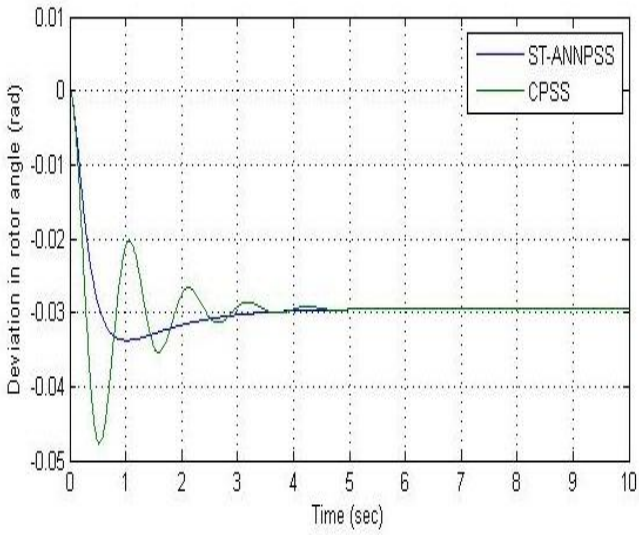

Fig. 11 Deviation of rotor angle for P=0.2 and Q=0.6 (pu).

As we discussed before, the system without power system stabilizer is unstable. When power system stabilizer introduced into the system for P=1(pu) and Q=0(pu). It can be observed from Fig. 8 and Fig. 9 that deviation in rotor speed and rotor angle settle down and there is no much difference between CPSS and ST-ANNPSS and system is stable.

But for new value of P and Q i.e. P=0.2(pu) and Q=0.6(pu) it can be observed from Fig. 10 and Fig. 11 that there is a significant difference in deviation in rotor speed and rotor angle between CPSS and ST-ANNPSS. It can be seen that ST-ANNPSS give much better performance than CPSS.

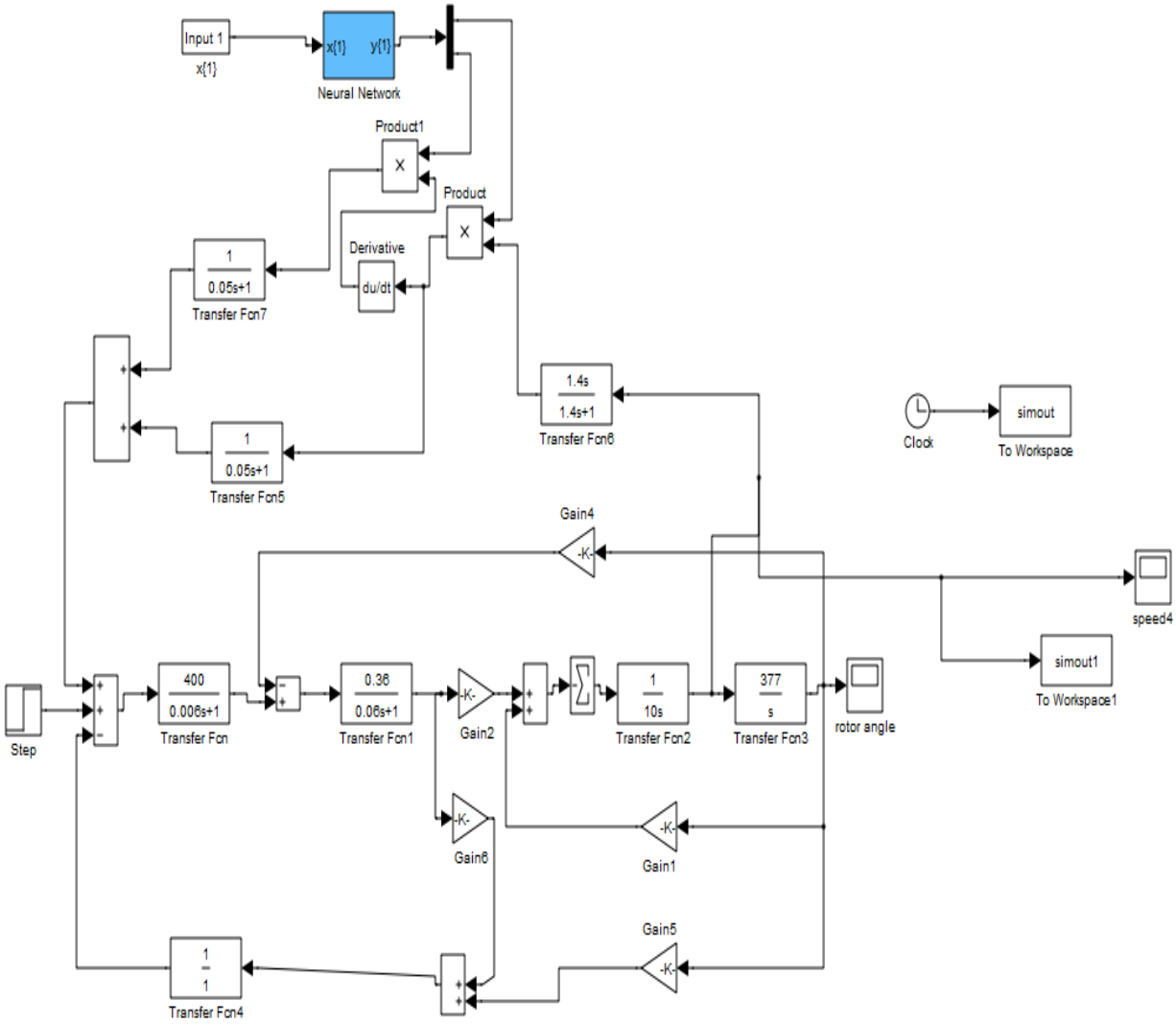

Fig. 12 Simulink model of Power System Stabilizer with Artificial Neural Network.

Performance of the ANN is observed for different number of neurons in the hidden layer and performance graphs are observed for 30 and 40 neurons.

For 30 neurons the performance goal is not reached .For 40 neurons the goal is reached. So from above it can be seen that the suitable value for number of neurons is 40.

VI. CONCLUSIONS

Conventional power system stabilizer (CPSS) has been widely used as a supplementary controller to damp out the low frequency oscillations. The tuning of CPSS parameters for nonlinear power systems in a robust way in order that the overall system stability can be improved is a major drawback of CPSS. Several met heuristic optimization techniques have been tried out to overcome this short coming. An Artificial Neural Network has been developed for the tuning of power system stabilizers. The ANN receives generator real power (P) and

reactive power (Q), which characterize the loading condition of a generator, as its inputs and provides the desired PSS parameter settings as its output. In the training process, several input-output training patterns are first compiled. These training patterns are used to train the neural network and obtain the connection weights between neurons. Once trained, the ANN is capable of providing the PSS parameters in real-time based on on-line measured system operating point. These training patterns are used to train the neural network and obtain the connection weights between neurons. Once these training patterns is used to train the neural network and obtain the connection weights between neurons. Once trained, the ANN is capable of providing the PSS parameters in real-time based on on-line measured system operating point.

The simulation result shows that the ANN based PSS performs well with good damping in a wide operation range compared with conventional PSS.

REFERENCES

[1]. A. Ghosh, G. Ledwich, O.P. Malik and G.S. Hope, "*Power System Stabilizer Based on Adaptive Control Techniques"*, IEEE Transactions on PAS, Vol. 103, pp. 1983-1989, March/April 1984.

[2]. A. Klofenstein, "*Experience with System Stabilizing Excitation Controls on the Generation of the Southern California Edition Company*", IEEE Transactions on PAS, Vol. 90, No. 2, March/April 1971, pp. 698-706.

[3]. IEEE Terms and definitions, 2004. Available: http://www.ieee.org/

[4]. Kundur, P., Power System Stability and Control, McGraw-Hill, 1994

[5]. D.P. Sen Gupta, N.G. Narhari, I. Boyd and B.W. Hogg, "*An Adaptive Power System Stabilizer which Cancels the Negative Damping Torque of a Synchronous Generator*", Proceedings of IEE, Part. C, pp. 109-117, 1985.

[6]. Bansilall, D. Thukaram', and K. Harish Kashyap', "*Artificial Neural Network Application to Power System . Voltage Stability Improvement"* 0-7803-7651-x/03~17.000 2003 lEEE

[7]. RaviSegal,Avdhesh Sharma,M.L.Kothari, "*A self-tuning power system stabilizer based on artificial neural network*" ,International Journal of Electrical Power & Energy Systems,volume 26,issue 6, July 2004, pages 423-430.

[8]. Simon Haykin, "*Neural Network: A Comprehensive Foundation*", 2nd Edition, IEEE Press, 1999.

[9]. Saikat Chakrabarti and B. Jeyasurya "*On-line Voltage Stability Monitoring Using Artificial Neural Network*" IEEE Transactions on Power Systems, Vol., No. , 2004.

[10]. S.Sahari, A.F.Abidin, and T.K.Abdul Rahman, "*Development of Artificial Neural network for Voltage Stability Monitoring*",National Power and Energy conference(PECon)2003 Proceedings,Bangi, Malaysia.

[11]. Ravi Segala, Avdhesh Sharmab, M.L. Kotharic "*A self-tuning power system stabilizer based on artificial neural network"* Received 14 November 2001; revised 3 October 2003; accepted 7 November 2003.

[12]. Jim Y. F. Yam and Tommy W. S. Chow, "*Feed forward Coefficients Networks Training Speed Enhancement by Optimal Initialization of the Synaptic*" IEEE Transactions on Neural Networks, Volume 12, No.2, March 2001, pp.430-434.