SPEED CONTROL OF DC MOTOR USING PWM

[1]Amit Kumar Yadav, [2]Annu Kumari Chaubey

[1]Asst. Prof., Department of Electrical and Electronics Engineering,
[2]UG, Department of Electrical and Electronics Engineering,
Raj Kumar Goel institute of technology for Women, UP (India)

ABSTRACT

The role of speed control in dc motors is very crucial in the achievement of desirable outputs. There are several methods for controlling the speed of dc motors. All the control strategies utilize the output speed error and its derivative as feedback damping signals. The objective of this paper is to provide an efficient and simple method for controlling the speed of dc motors using the pulse width modulation technique. Pulse width modulation is an effective method for adjusting the amount of power delivered to an electric load. The main advantage of PWM is that power loss in the switching devices is very low.

Keywords: PWM, DC Chopper, LCD Display

I INTRODUCTION

Speed control of dc motor could be achieved using mechanical or electrical techniques. In the past, speed controls of dc drives are mostly mechanical and requiring large size hardware to implement. The main objective of this work is to become familiar with the design and implementation of both software and hardware of a speed control of DC motor and to give senses of occurring overload condition to the operator at overload condition. As the system is based on the speed controlling of a DC motor, so the desired goal is to achieve a system with constant speed at any load condition. The purpose of a motor speed controller is to take a signal representing the required speed, and to drive a motor at that speed. Pulse width modulation is used to reduce the total load without a loss, which normally occurs when a power source is limited by resistive load. The underlying principle in the whole process is that the average power delivered is directly proportional to modulation duty cycle. If the modulation rate is high it is possible to smooth out the pulse train, using passive electronic filters and recover an average analogue wave.

II METHODOLOGY

As the system is based on the speed controlling of a DC motor, so the desired goal is to achieve a system with constant speed at any load condition. That means motor will run at fixed speed at any load condition. It will not vary with the amount of load. The software is made in such a way that even an unskilled operator can operate it. This system describes the design and implementation of the microcontroller based closed loop DC motor speed controller

that controls the speed of a DC motor by using PWM and DC chopper. In implementing this work frequency independent PWM output with variable duty cycle that can vary from 0% to 100% is generated. Furthermore an LCD display was fabricated to display the output; this kind of setup provides a complete user interface unit. Hence the system is complete stand-alone and user friendly. In case of sudden load drops the speed of the motor will be very high. As a result output voltage will be also very high. So controller unit will sense output voltage and will compare with the desired level of voltage. In case of excessive load, motor cannot run at its desired speed, and then OCR will start increasing until reaches its maximum value. After reaching the maximum value, there remains no improvement of the speed, i.e. output voltage does not matches the desired level then microcontroller will send a message "OVERLOAD" using the LCD, so that the user can understand the condition and hence reduce the load of the motor.

III CLASSIFICATION OF DC MOTORS

DC motors are classified into three types depending upon the way their field windings. The DC motors are in general much more adaptable speed drives than AC motors which are associated with a constant speed rotating field. Indeed one of the primary reasons for the strong competitive position of DC motors in modern industrial drives is the wide range specified,

$N=K(E-b/\phi)$

$N=K(V-IaRa/\phi)$

Where V= supply voltage (volts)

Ia= armature current (amps)

Ra= armature resistance (ohms)

Φ= flux per pole (Weber)

E_b= back emf (volts)

This equation gives two methods of effective speed changes.i.e. The variation of field excitation, if this causes in the flux per pole Φ and is known as the field control. The variation of terminal voltage (V).this method is known as armature control.

3.1 Flux Control Method

It is known that $N\alpha 1/\Phi$ by decreasing the flux, the can be increased and vice versa. The flux of DC motor can be changed by changing I_sh with help of a shunt field rheostat. Since I_sh in relatively small, shunt field rheostat has to carry only a small, so that rheostat is small in size. This method therefore very efficient in non-interpolar machines the speed can be increased by this method in the ratio 2:1 any further weakening of flux Φ adversely affect the communication.

3.2 Armature Voltage Control Method

DC motor can also be obtained by varying the applied voltage to the armature. Ward-Leonard method of speed control.

3.3 Armature Resistance Control

In this method a variable series resistor Re is put in a armature circuit. In this case the field is directly connected across the supply and therefore the flux is not affected by variation.

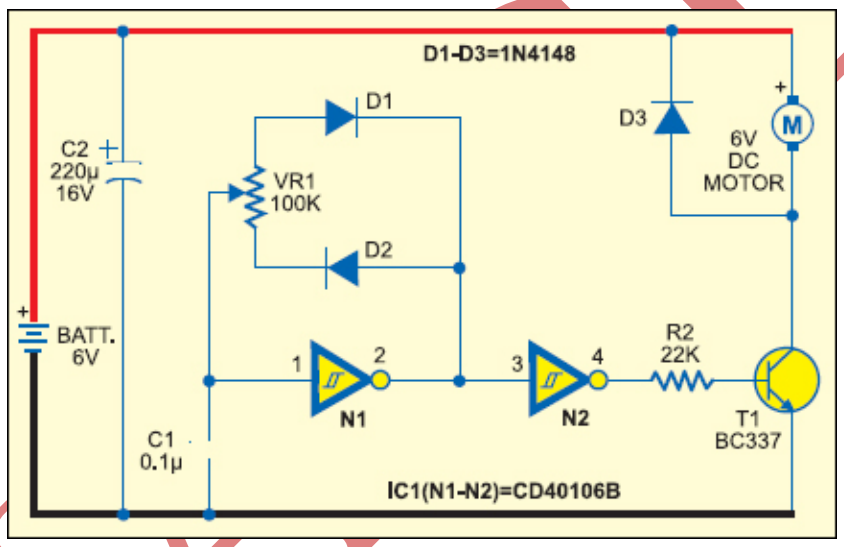

Fig 1: DC Motor Speed Control Using PWM

IV PULSE WIDTH MODULATION

There are many forms of modulation used for communication information. When a high frequency signal has amplitude varied in response to a lower frequency signal. When the signal frequency is varied in response to the modulation signal we have FM. These signal are used for radio modulation because the high frequency carrier signal is needs for efficient radiation of the signal.

4.1 Linear Modulation

The simple modulation to interpret is where the average ON time of the pulses varies proportionally with the modulating signal. The advantages of linear processing for this application lies in the case of demodulation. The modulation signal can be recovered rpm the PWM by low pass filtering. As shown in fig 2.

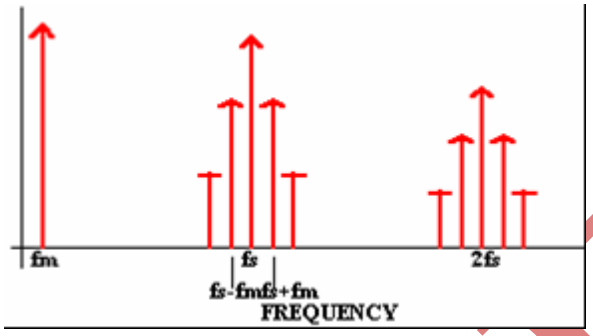

Fig 2: Linear Wave Form

4.2 Sawtooth PWM

The simplest analog from of generating fixed frequency PWM is by comparison with a linear slope wave form such as saw tooth this is implemented using a comparator whose output voltage goes to logic HIGH when input is greater than the other signal.

4.3 Regular Sampled PWM

This is an easy scheme to implement using analog electronics but suffers the imprecision and drifts of all analog computation as well as having difficulties of generating multiple edges signals.

4.4 Modulation Depth

For a single phase inverter modulated by a sine wave if we compare sine wave of magnitude from -2 to +2 with a triangle from -1 to +1linera relation between the input signal and the average output signal will be lost.

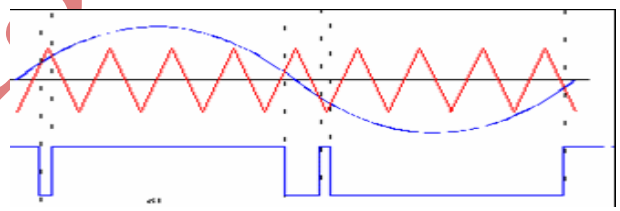

Fig 3: Saturated Pulse Width Modulations

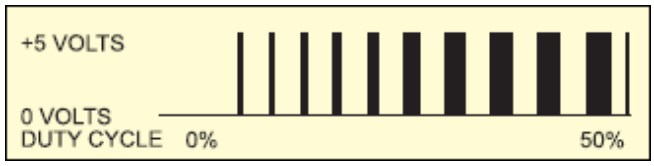

Fig 4: Pulse Width

V SCOPE OF STUDY

This circuit will work as a DC lamp dimmer, small motor controller, and even as a small heater controller. It would make a great speed control for a solar powered electric train. The circuit has been tried with a 12V electric motor using PWM and it worked ok, the circuit should work in applications such as a bicycle motor drive system. In a PWM circuit, common small potentiometers may be used to control a wide variety of loads whereas large and expensive high power variable resistors are needed for resistive controllers. The aim of this project is to provide economical and efficient means of DC motor speed control.

VI LIMITATIONS

This is a very basic PWM power controller and it does have some limitations. These are not design flaws, but the result of the design goal for the project which was low cost and simplicity. There is a current limit or overload sensing, you may need to use a fuse in line with the load. The PWM controller is open loop so it does not adjust the duty cycle to maintain a constant motor RPM as the load changes.

VII CONCLUSION

This project is the small part of big project. It is towards providing efficient means of motor speed using pulse width modulation develop a power supply circuit using centered tapped transformer. So as to obtain 12V to 24V as some changes some variation in load. Develop a PWM circuit using the NE556 timer. You again develop an RC delay circuit to allow the buzzer to sound as a safety measure.

REFERENCES

[1] P.S. Bhimbra, Power Electronics volume 2, Malaysia **1998**.

[2] M Rashid, Power Electronics, volume 3 **2002,** Malaysia 47 **1998**.

[3] L Li, D Crazkowski, P Pillay, Y. Liu "*Multilevel Selective Harmonic Elimination PWM Technique in Series Connected Voltage Inverters"*, NY USA.

[4] Atmel Corporation, AT89C51 Microcontroller Datasheet. **2000**

[5] National Semiconductor, DAC 0808 (8 bit D/A Converter) Datasheet.

[6] Tahri, A. Draou and M. Ermis, "*A Comparative Study of PWM Control Techniques for Multilevel Cascaded Inverters,*" Applied Power Electronics Laboratory, Department of electrotechnics, University of Sciences and Technology of Oran, BP 1505 El Mnaouar (31000 Oran), ALGERIA.

[7] N.A. Rahim (Member IEEE), E.A.Mahrous, K.M.Sor (Senior Member IEEE), "*Modeling And Simulation of Linear Generator PWM Multilevel Inverter",* National Power and Energy Conference (PECon) **2003** Proceedings, Malaysia.

[8] Leon M Tolbert (Oak Ridge National Laboratory), Thomas .G.Habetler (Georgia Institute of Technology, School of Electrical and Computer Engineering, Atlanta), *"Novel Multilevel Inverter Carrier Based PWM Method".*

[9] G. Sinha, T.A.Lipo, "*A Four Level Rectifier Inverter System for Drive Applications",* IEEE IAS Annual Meeting, pp 980-987. **1996**