# NARROWBAND INTERFERENCE SUPPRESS IN SPREAD SPECTRUM THROUGH SNR IMPROVEMENT

***Nitika Jain[1] , Yashika Bansal[2] , Mayank Sharma[3]***

*PG,[1,] Department of Electronics Engineering,*
*UG,[2',3,] Department of Electronics Engineering,*
*[1,2,3]UIET,KURUKSHETRA UNIVERSITY KURUKSHETRA. Haryana (India)*

## ABSTRACT

*Spread Spectrum (SS) communications offers a promising solution to an overcrowded frequency spectrum aimed growing demand for mobile and personal communication services. The proposed overlay of spread spectrum signal on existing narrowband users implies strong interference for the SS system.*
*This paper discusses how the system performance can be improved by preprocessing to suppress narrowband interference. Linear prediction filters have been proposed since the 1980s for the suppression of narrowband interference. In 1991 Vijayan and Poor proposed nonlinear methods of suppressing the narrowband signal with significant increase in SNR improvement. We derive an enhancement to this nonlinear prediction and achieve further improvement by applying the technique to interpolating filter structures. Of significant interest to the United States military is the ability of an enemy to deny or disrupt the operation of Global Positioning System (GPS). In order to combat this threat the GPS Joint Program Office (JPO) initiated the Tactical GPS Anit-Jam Technology (TGAT) project which yielded a prototype DEF to remove narrowband interference. Finally we extend the results to the case of multiple spread spectrum users and demonstrate how nonlinear filtering can dramatically outperform linear filtering.*

***Keywords :*** *Spread Spectrum Communication, Interference, Global, Positioning System, Decision Feedback Equalizer*

## I. INTRODUCTION

There is much concern in the communication industry with the increasingly overcrowded frequency spectrum, a condition aggravated by the growing demand for mobile radio and personal communications services. The use of spread spectrum for these emerging multiuser environments has been proposed as a means of overlaying new mobile systems on existing band occupants, thereby relieving the demand for new allocations.

The proposed overlay of spread spectrum signals on existing narrowband users presents an opportunity for new nonlinear techniques in signal processing. Single user frequency bands can be modeled with some accuracy as having a Gaussian environment, however the presence of additional data signals causes decidedly non-Gaussian behavior. Optimal detectors and receivers for such channels are therefore no longer linear. For interference suppression this means the filtering improvement is a non-Gaussian one. Non-linear filtering is one of the possible technique that can be profitably used in such environments.

So exactly what is the **NAVSTAR** Global Positioning System? It is a comprehensive, all weather, global, three-dimensional satellite navigation system comprising 21 satellites, plus three in-orbit spares (12). These satellites continuously transmit on two frequencies, L1 and L2. L1, 1575.42 MHz, is modulated with precision code only. The difference in frequency between the two codes is needed to improve the degree of position accuracy. P code is significantly more accurate than C/A code and is available only to military and other authorized users, whereas the C/A code is free of charge to anyone in the world who owns a GPS receiver. Each satellite has its own unique C/A and P code so that a receiver can tell which satellite sent the received signal. To obtain lock, the GPS receiver compares an identical time-shifted version of the code against the received signal. At some point, if the received signal is valid, the two signals will match up, or correlate, indicating receiver lock-on.

While SS has inherent noise suppression capability (it is this characteristics of spread spectrum that suggests the new applications), this paper discusses how system performance can be further enhanced by preprocessing to suppress narrowband interference. Techniques for filtering of the SS signals to suppress narrowband interference have been studied since the 1980s. Fixed and adaptive linear prediction filters were first used to suppress the significant portions of interference. Interpolating linear filters were found to give even greater interference suppression [1, 2,3,4,5].

In all Communication System, the modulated waveform occupies a frequency bandwidth that is dependent upon the modulation method used and the data being sent. In a spread spectrum system, the transmitted bandwidth of the signal has been spread over a larger bandwidth than the original modulated bandwidth. This transforms the power spectral density into a more uniform spectrum much like that of a noise. To qualify as a spread spectrum, a system must satisfy the following the three conditions:-

a) The signal occupies a bandwidth much in excess of the minimum bandwidth required by the information.
b) Spreading is accomplished through the use of a code signal independent of the data itself.
c) At the receiver, dispreading is accomplished by the correlation of the received signal with a replica of the spreading code used at the transmitter.

**In this paper** we derive an enhancement to the nonlinear prediction technique of vijayan and poor as well as a new nonlinear interpolating filter structure. Furthermore, we extend the results to the case of multiple spread spectrum users and discusses some issues that arise in the analysis of the nonlinearities. An approximate conditional mean nonlinear recursive filter is introduced. Results for simultaneous comparing linear and non-linear filters for the case of known statistics are presented.

## II. ACTIVE INTERFERENCE SUPPRESSION TECHNIQUES

Narrowband Interference in a spread spectrum can be actively suppressed by exploiting the discrepancy in the bandwidth of the two signals. The spread spectrum signal is essentially unpredictable, while the narrowband signal can be predicted with some accuracy. Consequently any prediction of a received signal consisting of spread spectrum signal plus narrowband interference will be a prediction primarily of the interfering narrowband signal.

Previous researchers have investigated linear filtering techniques for interference suppression in SS. If the interference is wide sense stationary and the statistics are known, the Lavinson-Durbin algorithm can be used to recursively solve for the optimal linear filter coefficients. For unknown statistics, several techniques exist to determine the optimal tap weights adaptively. Among these the least mean square (LMS) algorithms is used most frequently due to ease of analysis and implementation.

## 2.1 SYSTEM MODEL

In order to describe and analyze the narrowband interference suppression problem, we will assume that the received signal is passed through a filter matched to the chip waveform and chip-synchronously sampled once during each chip interval. The equivalent discrete time received signal will have components due to the spread spectrum signal, $s_k$, the narrowband interference, $i_k$, and the ambient white noise, $n_k$. The observation at sample k is then given by

$$Z_k = s_k + n_k + i_k.$$

The ambient noise can be modeled as being white Gaussian with variance, the signal $s_k$ as being $\pm$ 1 with equal probabilities, and the interference as having bandwidth much less than the spread bandwidth. The three signals can be assumed to be mutually independent. The state space representation of our system is then given by

$$X_k = \Phi x_{k-1} + w_k.$$

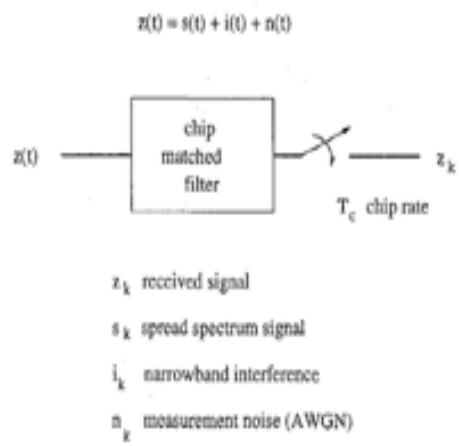


Fig1. System Model

$$Z_k = Hx_k + V_k.$$

Where H=[1 0…0] and $\Phi$ is the companion matrix of all the vectors $\Phi_1$…….. $\Phi_p$. The observation noise in our system $v_k$ is the sum of the white Gaussian measurement noise, $n_k$, and the spread spectrum signal, $s_k$. The variance of the combined observation noise is 1+ $\sigma_n^2$ (after normalizing to the energy of the spread spectrum signal and assuming it is equiprobable $\pm$1. This reduces the message signal back to its original bandwidth, while spreading any interference that might be present).

## 2.2 ACM FILTER

Recall that the minimum mean squared error (MMSE) estimator of the state $x_k$ at a fixed time k given the previous observation is $E[X_K|Z_O^{K-1}]$ where $Z_O^{K-1}$ represents all observation from time 0 to time k-1. Using the above model, if the observation noise were Gaussian, this would implt that the observation and the state were jointly Gaussian. In this case the conditional mean (and the MMSE estimator) would also have a Gaussian distribution. For the system model used here the measurement noise is clearly not Gaussian, and the optimal filter (that is the exact conditional filter) is nonlinear with exponentially increasing complexity. For the general state space filtering formulation with non-gaussian measurement noise. In particular, Masreliez proposed that some, but not all, of the Gaussian assumptions used in the derivations of the kalman filter be retained in defining a nonlinear recursively updated filter. He abandoned the requirement that the observation noise be Gaussian. However, he retained a Gaussian distribution for the conditional mean, although it is not a consequence of the probability densities of the system(as is the case for Gaussian observation noise); hence the name approximate conditional mean (ACM) that is applied to this filter. The ACM filter provides the tanh term; that is, it corrects the measurement by a factor in the range [-1,1] that estimates the spread spectrum signal. When the filter is performing well, the variance term in the denominator of tanh is very low. This means the argument of tanh is larger, driving the tanh into a region where it behaves like the sgn(.) function, and thus estimates the spread spectrum signal to be +1 if the residual signal $€_k$ is positive, and -1 if the residual signal is negative.

## SIMULATIONS

In order to access the performance gains afforded by the nonlinear techniques described above, simulations were run for a second order AR interferer with both poles at 0.99. In this simulation the noise power was held constant at σn2=0.01 while the total of noise plus interference power was varied from -20db to 5 db (all relative to a unity power SS signal). Our figure of merit in comparing filtering methods is the ratio of SNR at the output of filtering to the SNR at the input, which reduces to

SNR improvement=E (|zk-sk|2)

E(|€k-sk|2)

Where €k is defined as previously. The results for the Kalman predictor and the ACM predictor are calculated.

## ADAPTIVE FILTERING

## 3.1 LINEAR PREDICTOR

When the statistics for the AR process are not known, an adaptive algorithm must be used to find the optimal tap weights for the linear predictor. The LMS algorithm is one of the simplest adaptive algorithms to analyze and implement. The Linear predictor using an LMS filter of Length L has the system diagram. The residual of the prediction, $€_{k,}$ is sent to the input of the SS receiver. A normalized step size $\mu_k$ makes the step less dependent on the signal amplitude in $X_k$ and also speeds the convergence while guarding against the instability.

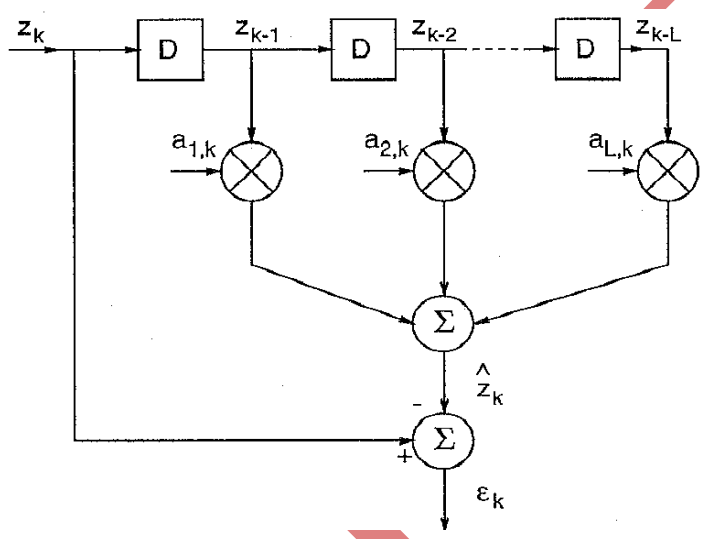


Fig2. Linear Predictor

The estimate of the signal power $r_k$ is an exponentially weighted estimate. $\mu_0$ is chosen small enough to ensure convergence; $r_0$ should be large enough so that the denominator never shrinks so small as to make the step size large enough for adaptation to become unstable.

### 3.2 NON-LINEAR PREDICTOR

The non-linearity appearing in the ACM filter has been introduced into the prediction structures. Assuming as before, that the prediction has the Gaussian distribution, then the distribution of the current observation conditioned on the previous observation is a sum of a Gaussian and a binary random variable. This transformation represents the residual less the soft decision on the SS signal. Let $z_k$ represents the observation less the soft decision on the spread spectrum signal, that is, Fig3.

The non-linear prediction is given by

Zk= Φk-1. [zk-1 zk-2……..zk-l]

So that the estimate of the interference is based on the observation less the soft decision on the signal. The tap weight update is unchanged, i.e., if the tanh function accurately tracks the SS signal, the filter essentially predicts the interference in white Gaussian noise, and should only be limited by the unpredictable part of the AR process, the measurement noise and the excess error in the LMS algorithm.

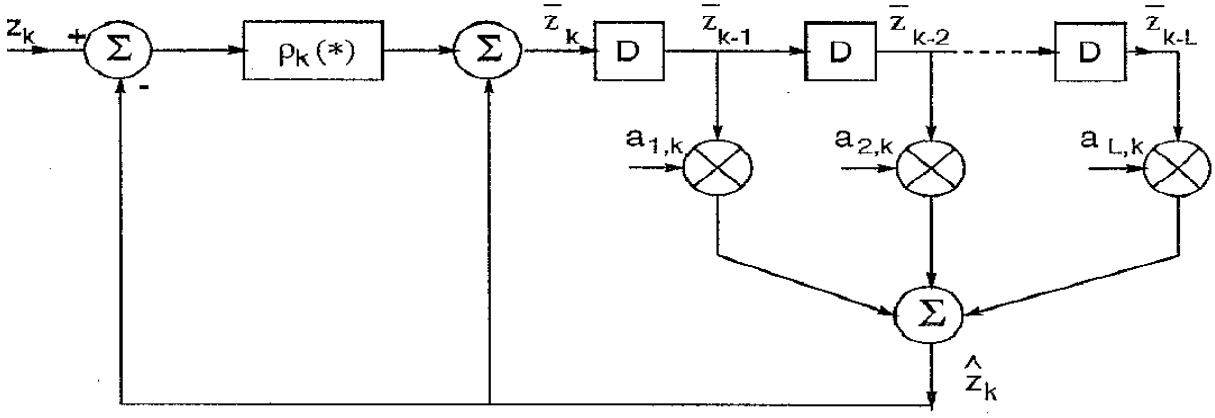


Fig3. Nonlinear Predictor

IV INTERPOLATING FILTERS

Previous investigation into linear suppression filters led to the use of transversal, interpolating filters. In addition to the good phase characteristics of the symmetric interpolating filters, these filters offered greater SNR improvement than predicting filters [2,4]. These results are extended to the Kalman and ACM filters in the following analysis. The goal of this line of this research was to determine what gain could be obtained from an interpolating non-linear filters, and how such a filter could be implemented. The first relationship is a statement of Bayes formula,

P(Xk|Zok-1)=P(Z0k-1,Zk+1n|Xk) P(Xk)

P(Z0k-1,Zk+1n)

While the mean and the covariance of the interpolated estimate at each sample k can be computed per the above, recall that the forward and backward means and covariance matrices are determined by the non-linear ACM type filter recursions.

## 4.1 ADAPTIVE NON-LINEAR BLOCK INTERPOLATOR

Linear interpolator were found to offer better SNR improvement than the linear predictors, so the question arises as to whether an interpolating version of the non-linear ACM adaptive filters gives similar improved performance over the ACM predictor. The margin for the improvement in the ACM filter for the given interferer is not large.

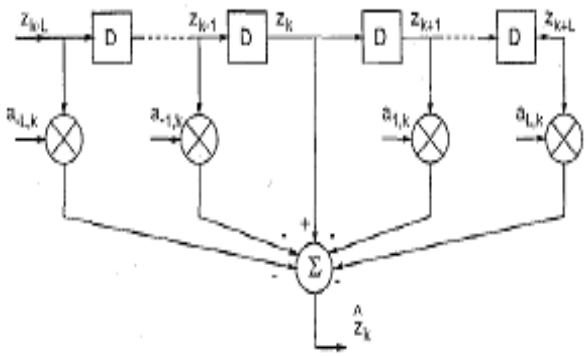


Fig4. Linear Interpolator

The same data is rum through a backward adaptive ACM filter with a separate tap weight vector, also of length L, to generate estimates,

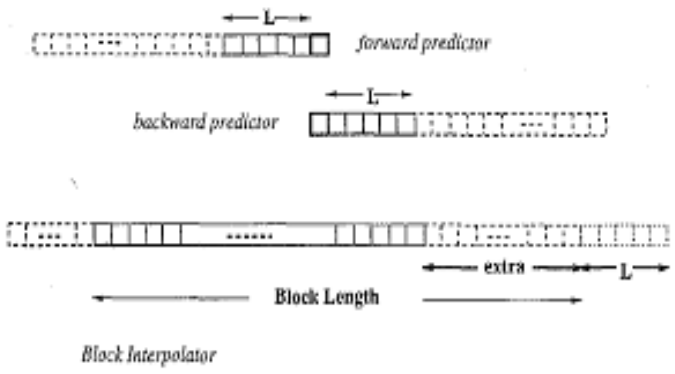


Fig5. Non-linear Block Interpolator

The delay should be inconsequential in most spread spectrum applications and, depending on the hardware implementation of the ACM filters, the added complexity may also prove to be acceptable.

## V CONCLUSION

In this treatment we have discussed the use of non-linear techniques in systems with overlaid narrowband and spread spectrum signals. Simulations confirmed that the significant increase in the SNR at the SS receiver can be achieved when using non-linear vice linear filtering, especially in the case of multiple spread spectrum users. Implementation of the non-linear algorithm would require greater complexity than its linear counterpart which is typically encompasses in a single DSP chip. The function tanh and sech would either have to be calculated or stored in the memory as a look-up table. The interpolator would require on the order of three times as much calculation, and for multiple SS users a separate algorithm would be required to estimate the offset in the decision feedback.

The criterion for evaluating the performance in this paper was the SNR improvement. While a higher input SNR will lead to a lower BER, the quantitative improvement will not be as great. The processing gain of the SS signal will provide some interference suppression in its own right, for which both linear and nonlinear processing will benefit. This is a topic for further investigation. Also, because the proposed application for the commercial use of the spread spectrum will involve the overlaying of SS on existing narrowband users, the effectiveness of these techniques over several interferers should be investigated.

The study of non-linear stochastic difference equation describing the ACM covariance poses a research topic in its own right. Criteria to assure a probabilistic convergence of the ACM covariance and the characterization of the convergence rate is needed, as well as the convergence analysis of the adaptive non-linear filter. A more accurate model of the interferer may abandon the AR process in favor of the stochastic model of a digitally modulated signal. Multiuser detection could also possibly be applied to suppress such narrowband users by modeling these signals as such.

## REFERENCES

[1]. J.Ketchum and J.G.Proakis, *"Adaptive algorithm for estimating and suppressing narrowband interferer in pn spread spectrum system"*, IEEE Transactions on communications, vol. COM-30, pp.913-924 , May1982.

[2]. L, Li and L.B. Milstein, *"Rejection of pulsed CW interference in pn spread spectrum signals using complex adaptive filters,"* IEEE transactions on communications, vol. COM-31, pp.10-20, January1983.

[3]. L, Li and L.B. Milstein, *"Rejection of the narrowband interference in pn spread spectrum signals using transversal filters,"* IEEE transactions on communications, vol. COM-30, pp.925-928, May1982.

[4]. E.Masry, *"Closed form analytical results for the rejection of narrowband interference in pn spread spectrum systems, part ii: linear interpolation filters,"* IEEE transactions on communication, "Vol. COM-33, pp.10-19, January 1985.

[5]. E.Masry "*Closed form analytical results for rejection of narrowband interference in pn spread spectrum systems-part i: linear prediction filters,"* IEEE transactions on communications, Vol. COM-32, pp.888-896, August 1984.

[6]. R.Vijayan and H.V. Poor, *"Nonlinear techniques for interference suppression in spread spectrum systems,"* IEEE transactions on communications, Vol.38, pp.1060-1065, July 1991.

[7]. L.Garth and H.V.Poor, *"Narrowband interference suppression in impulsive channels, IEEE transactions on Aerospace and Electronic systems*", Vol. 28, pp. 15-34, January 1992.

[8]. H.V.Poor, "*An introduction to signal Detection and Estimation".* Springer-Verlog,1988.

[9]. C.J.Masrelie z, "*Approximate non-Gaussian filtering with linear state and observation relations,"* IEEE transactions on Automatic Control, pp.107-110, February 1975.